IS 1239-2 (2011): Steel Tubes, Tubulars and Other Steel Fittings, Part 2: Steel Pipe Fittings [MTD 19: Steel Tubes, Pipes abd Fittings]

BLANK PAGE

भारतीय मानक

इस्पात की नलियाँ, नलिकाकार सामग्रियाँ तथा इस्पात की अन्य फिटिंगें — विशिष्टि

भाग 2 इस्पात की पाईप फिटिंगें

(पाँचवा पुनरीक्षण)

Indian Standard

STEEL TUBES, TUBULARS AND OTHER STEEL FITTINGS — SPECIFICATION

PART 2 STEEL PIPE FITTINGS

(Fifth Revision)

ICS 77.140.75

B U R E A U O F I N D I A N S T A N D A R D S
MANAK BHAVAN, 9 BAHADUR SHAH ZAFAR MARG
NEW DELHI 110002

September 2011 **Price Group 10**

Steel Tubes, Pipes and Fittings Sectional Committee, MTD 19

FOREWORD

This Indian Standard (Part 2) (Fifth Revision) was adopted by the Bureau of Indian Standards, after the draft finalized by the Steel Tubes, Pipes and Fittings Sectional Committee had been approved by the Metallurgical Engineering Division Council.

This standard was first published in 1969 and fourth revision of this standard was published in 1992. While reviewing this standard in the light of experience gained during these years, the Committee decided to further revise this standard.

In this revision the following modifications have been made:

a) All amendments (Amendment Nos. 1 to 6) have been incorporated.
b) The requirement of approximate radius for 125 and 150 NB bends have been incorporated in Table 4.
c) Additional column for maximum inside diameter of internal parallel thread for steel socket have been incorporated in Table 6.

This standard is published in two parts. The other part in the series is:

Part 1 Steel tubes

The nominal bores specified in this standard and the corresponding nominal sizes of pipe threads according to IS 554 : 1999/ISO 7-1 : 1994 'Pipe thread where pressure tight joints are made on the threads — Dimension, tolerance and designation (*fourth revision*)' are given in Annex A.

The standard keeps in view the manufacturing and trade practices followed in the country in this field. In formulating this standard assistance has been derived from the following publications:

BS 1387 : 1967 'Specification for steel tubes and tubulars (suitable for screwing to B. S. 21 pipe threads)', issued by the British Standards Institution (BSI).

BS 1740 : 1965 'Specification for wrought pipe fitting, iron and steel (screwed B. S. P. thread)', issued by the British Standards Institution (BSI).

For the purpose of deciding whether a particular requirement of this standard is complied with, the final value, observed or calculated, expressing the result of a test or analysis, shall be rounded off in accordance with IS 2 : 1960 'Rules for rounding off numerical values (*revised*)'. The number of significant places retained in the rounded off value should be same as that of the specified value in this standard.

AMENDMENT NO. 1 SEPTEMBER 2012
TO
IS 1239 (PART 2) : 2011 STEEL TUBES, TUBULARS AND OTHER STEEL FITTINGS — SPCIFICATION

PART 2 STEEL PIPE FITTINGS

(Fifth Revision)

(*Page* 16, *Table* 18) — Insert the following size at the end:

Sl No.	**Nominal Size of Outlet** (1) × (2)	**Minimum Length**
(1)	(2)	(3)
xxxiv)	150 × 125	140

(MTD 19)

Reprography Unit, BIS, New Delhi, India

Indian Standard

STEEL TUBES, TUBULARS AND OTHER STEEL FITTINGS — SPECIFICATION

PART 2 STEEL PIPE FITTINGS

(Fifth Revision)

1 SCOPE

This standard (Part 2) covers the requirements for butt welded and seamless, plain ended, screwed sockets, steel tubulars and other welded and seamless steel pipe fittings intended for use for water, non-hazardous gas, air and steam. The requirements of pipe nuts are covered in IS 3468.

2 REFERRENCES

The following standards contain provisions which, through reference in this text, constitute provisions of this standard. At the time of publication, the editions indicated were valid. All standards are subject to revision and parties to agreements based on this standard are encouraged to investigate the possibility of applying the most recent editions of the standards indicated below:

IS No.	*Title*
228 (All parts)	Methods of chemical analysis of steels
554 : 1999/ ISO 7-1 : 1994	Pipe threads where pressure-tight joints are made on the threads— Dimension, tolerances and designation (*fourth revision*)
1239 (Part 1) : 2004	Steel tubes, tubulars and other wrought steel fittings — Specification : Part 1 Steel tubes (*sixth revision*)
1387 : 1993	General requirements for the supply of metallurgical materials (s*econd revision*)
1501 : 2002/ ISO 6507-1 : 1997	Method for Vickers hardness test for metallic materials (*third revision*)
1608 : 2005/ ISO 6892 : 1998	Metallic materials — Tensile testing at ambient temperature (*third revision*)
1879 : 1987	Malleable cast iron pipe fittings (*second revision*)
2335 : 2005/ ISO 8493 : 1998	Metallic materials — Tube drift expanding test (*second revision*)
2629 : 1985	Recommended practice for hot-dip galvanizing of iron and steel (*first revision*)
2633 : 1986	Methods for testing uniformity of coating on zinc coated articles (*second revision*)
3468 : 1991	Pipe nuts (*second revision*)
4711 : 2008	Methods for sampling of steel pipes, tubes and fittings (*second revision*)
4736 : 1986	Specification for hot dip zinc coatings on mild steel tubes (*first revision*)
8999 : 2003/ ISO 7-2 : 2000	Pipe threads where pressure-tight joints are made on the threads — Verification by means of limit gauges (*first revision*)

3 TERMINOLOGY

For the purpose of this standard, the following definitions shall apply.

3.1 Fittings — Term used to denote fittings like elbows, tee, cross, etc.

3.2 Socket — The screwed coupling utilized in jointing the tubes together.

NOTE — The term socket is synonymous with the term coupling, barrel and column socket.

3.3 Tube (Pipe) — A long, hollow, open-ended object circular or other cross-section. The terms tube and pipe are often used synonymously.

3.4 Tubular — A term used to include pieces, long-screws, bends springs, return bends and barrel nipples.

4 DESIGNATION

4.1 Steel sockets and tubular covered by this standard shall be designated by their nominal bore.

4.2 Other steel fittings shall be designated giving the following particulars in the sequence shown:

a) Type of fittings (*see* **4.2.1**); and
b) Size designation (*see* **4.2.2**).

4.2.1 *Type of Fittings*

The types of fittings are denoted as elbow, tee, cross, etc.

4.2.2 *Size Designation*

This is determined by the nominal bore, in millimetre of the pipe at the outlets.

4.2.2.1 *Equal fitting*

Where all outlets in a given fitting are of the same size, the fitting shall be referred to by that one size, irrespective of the number of the outlets.

4.2.2.2 *Unequal fittings*

These are referred to by the size of each outlet.

5 SUPPLY OF MATERIAL

General requirements relating to the supply of steel tubulars and other fittings shall conform to IS 1387.

6 MANUFACTURE

6.1 Tubulars conforming to this standard shall be made from tubes which comply with all the appropriate requirements of IS 1239 (Part 1).

6.2 Sockets

Sockets shall be manufactured from mild steel by any of the following processes:

a) Hot-finished seamless (HFS);
b) Electric resistance welded or high frequency induction welded ERW or HFIW;
c) Hot-finished welded (HFW); and
d) Hand welded.

6.2.1 All sockets shall be either welded or seamless as agreed to between the purchaser and the manufacturer.

6.2.2 All electrically welded sockets used for steam services shall be normalized.

6.3 Other Fittings

Other steel pipe fittings excluding socket shall be manufactured from steel by any approved process.

6.3.1 Unless otherwise specified by the purchaser, all fittings shall be manufactured with thread connections, complying with the requirements of IS 554. At the request of the purchaser, the manufacturer is permitted to make plain end fittings without screwing as per the dimensions given in the relevant tables. The outside diameter of the plain end fittings match with the outside diameter of tubes in accordance with IS 1239 (Part 1). Outside diameter of the internal threaded fittings shall be same as outside diameter of sockets as per Table 6.

6.4 The steel from which the fittings are made, when tested in accordance with IS 1608 shall show on test a minimum tensile strength of 320 MPa. The percentage elongation on a gauge length of 5.65 $\sqrt{S_o}$ (where S_o is the original cross-section of the test specimen) shall not be less than 20 percent.

7 CHEMICAL COMPOSITION

7.1 The ladle analysis of steel shall not show sulphur and phosphorus in amounts exceeding 0.05 percent each.

7.1.1 The ladle analysis of steel shall be carried out either by the method specified in IS 228 or any other established instrumented/chemical method. In case of dispute the procedure given in IS 228 and its relevant parts shall be referee method.

However, where the method is not given in IS 228 and its relevant parts, the referee method shall be as agreed to between the purchaser and the manufacturer.

7.1.2 *Product Analysis*

The maximum permissible variation of sulphur and phosphorus, in case of product analysis from the limits specified under **7.1** shall be 0.005 percent each.

NOTE — The product analysis is not applicable to rimming quality steel.

8 DIMENSIONS OF TUBULARS

8.1 Pieces

Pieces shall conform to the dimensions given in Table 1.

8.2 Nipples

Close taper and running nipples shall be made only from heavy tubes. Barrel nipples shall be made either from medium or heavy tubes. The dimensions of nipples shall be as given in Table 2.

8.3 Longscrews (Connectors)

8.3.1 Longscrews (connectors) shall be made only from heavy tube and shall be supplied single or double, as may be specified, and shall conform to the appropriate dimensions given in Table 3.

8.3.2 The sockets shall be suitably faced on the end which the back nut abuts. The face of the back nut which abuts against the sockets shall be concave at an angle of approximately 15°.

8.3.3 The parallel threads on the longscrew and in the socket shall, in addition to complying with the appropriate requirement of IS 554, be of such a size that the socket runs on the connector hand-tight without perceptible shake.

This type of joints is permissible for low pressures, but is not recommended for higher pressures or for work in which there are wide variations of temperature.

NOTE — When it is necessary to use longscrew for running joints, the threads of the longscrew which accommodates, the running socket and back nut shall be parallel.

8.4 Bends and Springs

8.4.1 Bends and springs shall conform to the approximate dimensions given in Table 4. A tolerance of ±1.5° on the specified angle shall be permitted.

8.4.2 Type 1A bends shall be made only from heavy tubes and in addition to conforming to the approximate dimensions given in Table 4, shall be fitted with sockets and back nuts conforming to the requirements given in **8.3.2**.

8.4.3 Each bend and spring shall be supplied with one socket, if so specified by the purchaser.

8.5 Return Bends

Return bends shall be made from heavy tube, supplied with socket at one end if so specified by the purchaser, and shall conform to the dimensions given in Table 5. The ends of the bends shall be parallel within ±1.5°.

8.6 Sockets

Whenever tubulars are to be supplied with sockets, the dimensions of sockets shall be as given in Table 6. Tapping of sockets shall be done from one end only

NOTES

1 The socket lengths shown in Table 6 meet the requirements of ISO/R 50, but the minimum length has been increased to allow for the chamfer at the ends of the socket and is based on:

$$B = 2\,L + 3.5\,p$$

where

L = length of useful thread of pipe (*see* IS 554); and

P = pitch of thread.

2 For minimum length of faced sockets (*see* Table 3).

9 DIMENSIONS OF STEEL FITTINGS (OTHER THAN TUBULARS)

9.1 Sizes and dimensions of these fittings shall be as specified in Tables 7 to 28. All the dimensions given in these tables enable the fittings to be assembled with tubes screwed in accordance with IS 554.

Table 1 Dimensions of Pieces

(*Clause* 8.1)

All dimensions in millimetres.

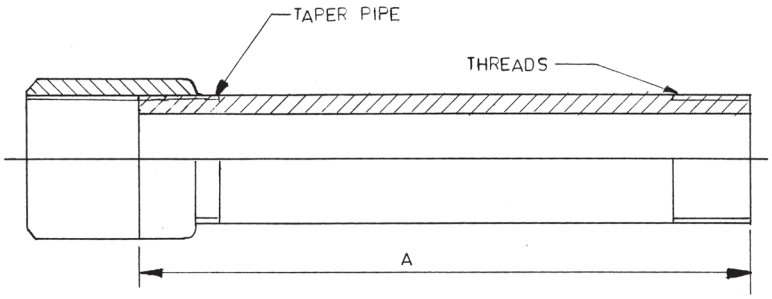

Sl No.	Nominal Bore	Approximate Standard Length, *A*			
(1)	(2)	(3)	(4)	(5)	(6)
i)	6	100	150	200	250
ii)	8	100	150	200	250
iii)	10	100	150	200	250
iv)	15	100	150	200	250
v)	20	100	150	200	250
vi)	25	100	150	200	250
vii)	32	150	200	250	300
viii)	40	150	200	250	300
ix)	50	150	200	250	300
x)	65	150	200	250	300
xi)	80	150	200	250	400
xii)	100	150	200	250	400
xiii)	125	250	300	400	500
xiv)	150	250	300	400	500

Table 2 Dimensions of Running Nipples; Close Taper Nipples and Barrel Nipples
(*Clause* 8.2)

All dimensions in millimetres.

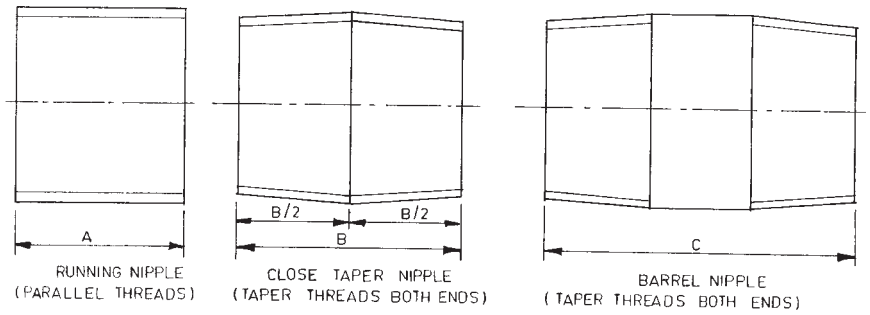

Sl No.	Nominal Bore	Standard Length					
		Running Nipple, *A*		Close Taper Nipple, *B*		Barrel Nipple, *C*	
		Minimum	Tolerance	Minimum	Tolerance	Minimum	Tolerance
(1)	(2)	(3)	(4)	(5)	(6)	(7)	(8)
i)	6	13		19		32	
ii)	8	19		27		38	+3
iii)	10	21		28		38	
iv)	15	27	+1.5	37	+1.5	51	
v)	20	30		39		54	+4.5
vi)	25	33		46		60	
vii)	32	38		51		70	
viii)	40	38		51		70	+6
ix)	50	48		60		79	
x)	65	51		69		89	
xi)	80	57		75		102	
xii)	100	70	+3	87	+3	114	+8
xiii)	125	78		96		124	
xiv)	150	78		96		127	

Table 3 Dimensions of Longscrews
(*Clauses* 8.3.1 *and* 8.6)

All dimensions in millimetres.

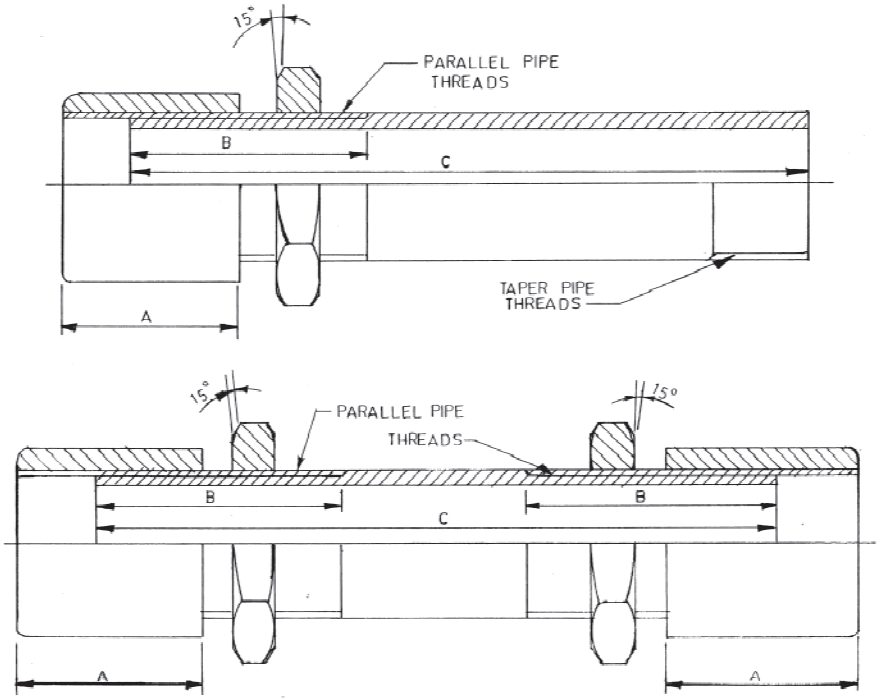

Sl No.	Nominal Bore	Faced Socket, *A*		Minimum Effective Length of Long Thread, *B*	Approximate Standard Length, *C*			
		Length, *Min*	Tolerance					
(1)	(2)	(3)	(4)	(5)	(6)	(7)	(8)	(9)
i)	6	17		29	100	150	200	250
ii)	8	25	+1.5	37	100	150	200	250
iii)	10	25		40	100[1)]	150	200	250
iv)	15	35		52	100[1)]	150	200	250
v)	20	37	+3	54	100[1)]	150	200	250
vi)	25	43		62	100[1)]	150	200	250
vii)	32	48		70	150[1)]	200	250	300
viii)	40	48	+4.5	71	150[1)]	200	250	300
ix)	50	57		82	150[1)]	200[1)]	250	300
x)	65	65		97	150[1)]	200[1)]	250[1)]	300
xi)	80	71		106	200[1)]	200[1)]	300	400
xii)	100	84	+6	121	200[1)]	250[1)]	300	400
xiii)	125	92		130	250[1)]	300[1)]	400	500
xiv)	150	92		132	250[1)]	300[1)]	400	500

NOTE — For particulars of back nuts, *see* IS 3468.

[1)]Double longscrew are not supplied in these lengths.

Table 4 Dimensions of Bends and Springs
(*Clauses* 8.4.1 *and* 8.4.2)

All dimensions in millimetres.

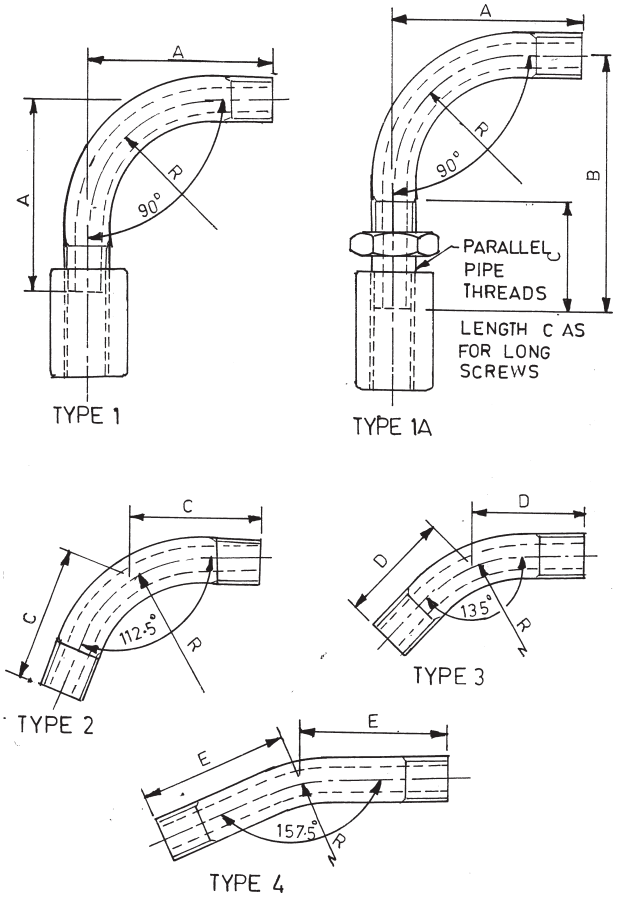

Sl No.	Nominal Bore	Bends 90° Approximate Centre of Face		Approximate Radius	Approximate Centre to Face for Springs		
		A	*B*	*R*	112.5° *C*	135° *D*	157.5° *E*
(1)	(2)	(3)	(4)	(5)	(6)	(7)	(8)
i)	6	51	73	32	48	44	44
ii)	8	64	92	41	60	57	54
iii)	10	73	105	48	67	64	60
iv)	15	86	127	57	79	76	73
v)	20	102	143	73	92	89	86
vi)	25	121	168	89	108	105	102
vii)	32	146	197	108	133	127	124
viii)	40	165	219	127	149	143	140
ix)	50	203	264	159	181	175	168
x)	65	248	321	197	222	213	206
xi)	80	292	371	232	260	248	241
xii)	100	381	467	308	340	324	318
xiii)	125	540	632	460	476	457	444
xiv)	150	622	718	540	572	540	527

Table 5 Dimensions of Return Bends
(*Clause* 8.5)
All dimensions in millimetres.

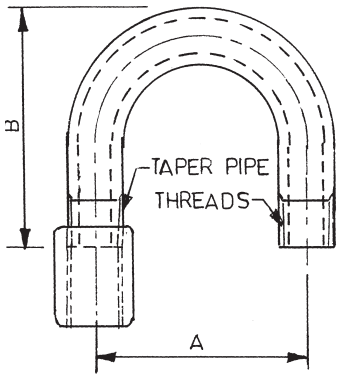

Sl No.	Nominal Bore	Approximate Centres	Approximate Back to Face
		A	*B*
(1)	(2)	(3)	(4)
i)	6	44	51
ii)	8	51	64
iii)	10	64	70
iv)	15	89	102
v)	20	102	121
vi)	25	114	140
vii)	32	127	152
viii)	40	165	178
ix)	50	190	210
x)	65	305	292
xi)	80	356	330
xii)	100	457	400
xiii)	125	762	578
xiv)	150	914	692

Table 6 Dimensions of Steel Sockets
(*Clauses* 6.3.1 *and* 8.6)
All dimensions in millimetres.

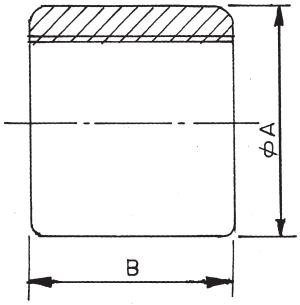

Sl No.	Nominal Bore	Minimum Outside Diameter	Minimum Length	Maximum Inside Diameter of Internal Parallel Thread
		A	*B*	
(1)	(2)	(3)	(4)	(5)
i)	6	15	19	8.637
ii)	8	18.5	27	11.549
iii)	10	22	28	15.054
iv)	15	27	37	18.773
v)	20	32.5	39	24.259
vi)	25	39.5	46	30.471
vii)	32	49	51	39.132
viii)	40	56	51	45.025
ix)	50	68	60	56.836
x)	65	84	69	72.442
xi)	80	98	75	85.142
xii)	100	124	87	110.228
xiii)	125	151	96	135.688
xiv)	150	178	96	161.088

NOTE — Conformity to col 5 shall be made with ‘GO’, ‘NO GO’ plain gauge.

Table 7 Dimensions of Screwed Ends of Fittings
(*Clause* 9.1)

All dimensions in millimetres.

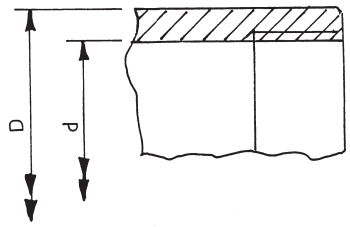

INTERNAL PARALLEL THREADS

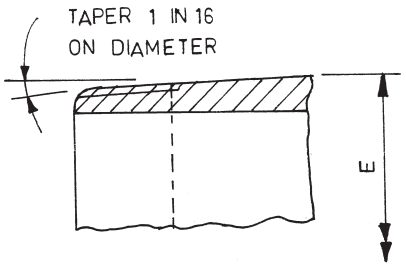

EXTERNAL TAPER THREADS

Sl No.	Nominal Size of Outlet	Minimum Outside Diameter *D*	Minimum Outside Diameter of Body Behind External Thread *E*	Maximum Inside Diameter of Body Behind Internal Thread *d*
(1)	(2)	(3)	(4)	(5)
i)	6	15	9.8	8.6
ii)	8	18.5	13.3	11.4
iii)	10	22	16.8	15.0
iv)	15	27	21.1	18.6
v)	20	32.5	26.6	24.1
vi)	25	39.5	33.4	30.3
vii)	32	49	42.1	39.0
viii)	40	56	48.0	44.8
ix)	50	68	59.8	56.7
x)	65	84	75.4	72.2
xi)	80	98	88.1	84.9
xii)	100	124	113.3	110.1
xiii)	125	151	138.7	135.5
xiv)	150	178	164.1	160.9

NOTE — For particular of threads, *see* IS 554.

Table 8 Dimensions of Elbows, Tees and Crosses, Equal
(*Clause* 9.1)

All dimensions in millimetres.

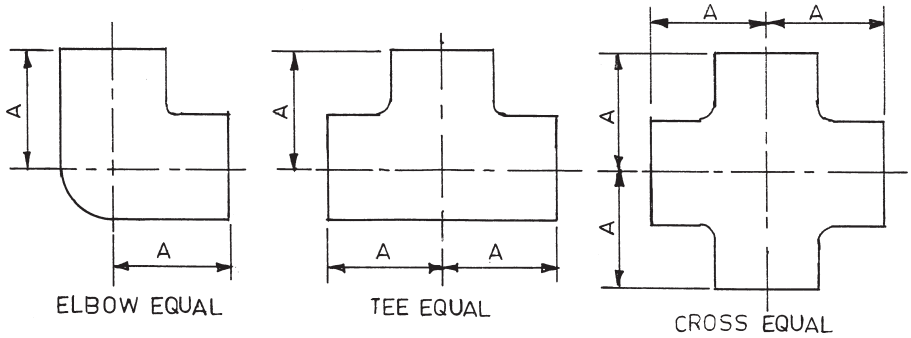

Sl No.	Nominal Size of Outlet	Minimum Length, Centre to Face
(1)	(2)	(3)
i)	6	16
ii)	8	22
iii)	10	24
iv)	15	32
v)	20	35
vi)	25	43
vii)	32	51
viii)	40	52
ix)	50	64
x)	65	76
xi)	80	89
xii)	100	115
xiii)	125	140
xiv)	150	160

Table 9 Dimensions of Elbows Reducing
(*Clause* 9.1)

All dimensions in millimetres.

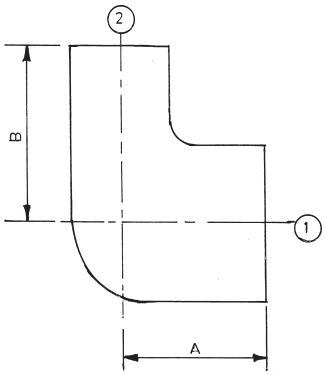

Sl No.	Nominal Size of Outlet (1) × (2)	Minimum Length, Centre to Face *A*	Minimum Length, Centre to Face *B*
(1)	(2)	(3)	(4)
i)	8 × 6	21	22
ii)	10 × 6	21	24
iii)	10 × 8	22	24
iv)	15 × 8	25	32
v)	15 × 10	27	32
vi)	20 × 8	27	35
vii)	20 × 10	29	35
viii)	20 × 15	32	35
ix)	25 × 10	32	43
x)	25 × 15	35	43
xi)	25 × 20	38	43
xii)	32 × 15	38	51
xiii)	32 × 20	41	51
xiv)	32 × 25	44	51
xv)	40 × 15	38	52
xvi)	40 × 20	41	52
xvii)	40 × 25	44	52
xviii)	40 × 32	48	52
xix)	50 × 15	41	64
xx)	50 × 20	44	64
xxi)	50 × 25	48	64
xxii)	50 × 32	52	64
xxiii)	50 × 40	56	64
xxiv)	65 × 40	60	76
xxv)	65 × 50	67	76
xxvi)	80 × 25	60	89
xxvii)	80 × 50	73	89
xxviii)	100 × 50	83	115
xxix)	100 × 80	95	115

Table 10 Dimensions of Tees, Reducing (on the Branch)
(*Clause* 9.1)

All dimensions in millimetres.

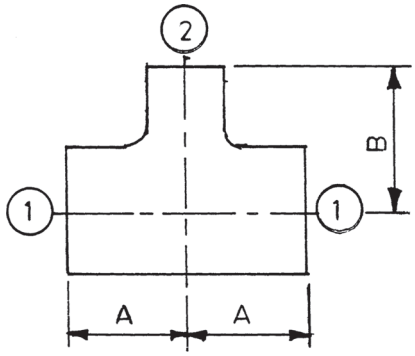

Tee, Reducing (on the branch)

Sl No.	Nominal Size of Outlet	Minimum Length, Centre to Face	Minimum Length, Centre to Face	Sl No.	Nominal Size of Outlet	Minimum Length, Centre to Face	Minimum Length, Centre to Face
	(1) × (2)	*A*	*B*		(1) × (2)	*A*	*B*
(1)	(2)	(3)	(4)	(1)	(2)	(3)	(4)
i)	8 × 6	21	22	xxiii)	50 × 20	44	64
ii)	10 × 6	21	24	xxiv)	50 × 25	48	64
iii)	10 × 8	22	24	xxv)	50 × 32	52	64
iv)	15 × 8	25					
v)	15 × 10	27	32	xxvi)	50 × 40	56	64
			32	xxvii)	65 × 25	54	76
vi)	20 × 8	27	35	xxviii)	65 × 32	57	76
vii)	20 × 10	29	35	xxix)	65 × 40	60	76
viii)	20 × 15	32	35	xxx)	65 × 50	67	76
ix)	25 × 10	30					
x)	25 × 8	32	43	xxxi)	80 × 25	60	89
			43	xxxii)	80 × 32	64	89
xi)	25 × 15	35	43	xxxiii)	80 × 40	67	89
xii)	25 × 20	38	43	xxxiv)	80 × 50	73	89
xiii)	32 × 10	35	51	xxxv)	80 × 65	79	89
xiv)	32 × 15	38	51				
xv)	32 × 20	41	51	xxxvi)	100 × 25	70	115
				xxxvii)	100 × 40	76	115
xvi)	32 × 25	44	51	xxxviii)	100 × 50	83	115
xvii)	40 × 10	37	52	xxxix)	100 × 80	95	115
xviii)	40 × 15	38	52	xxxx)	125 × 80	115	140
xix)	40 × 20	41	52				
xx)	40 × 25	48	52	xxxxi)	125 × 100	130	140
				xxxxii)	150 × 80	120	160
xxi)	40 × 32	49	52	xxxxiii)	150 × 100	135	160
xxii)	50 × 15	41	64				

Table 11 Dimensions of Tees, Reducing (on the Run and Branch, or on the Run Only)
(*Clause* 9.1)

All dimensions in millimetres.

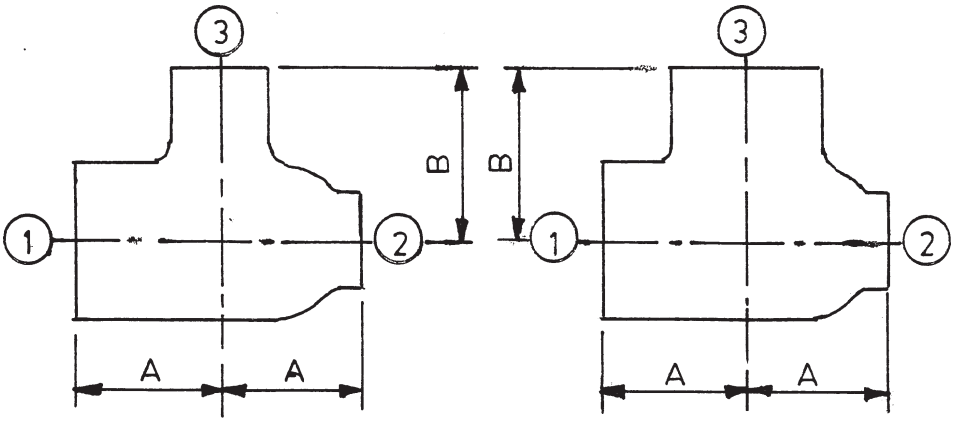

Tee, Reducing on the Run and Branch Tee, Reducing on the Run Only

Sl No. (1)	Nominal Size of Outlet (1) × (2) × (3) (2)	Minimum Length, Centre to Face *A* (3)	Minimum Length, Centre to Face *B* (4)
i)	20 × 15 × 15	32	35
ii)	20 × 15 × 20	35	35
iii)	25 × 20 × 15	35	43
iv)	25 × 20 × 20	38	43
v)	25 × 20 × 25	43	43
vi)	32 × 25 × 20	41	51
vii)	32 × 25 × 25	44	51
viii)	32 × 25 × 32	51	51
ix)	32 × 25 × 40	52	52
x)	40 × 32 × 25	44	52
xi)	40 × 32 × 32	49	52
xii)	40 × 32 × 40	52	52
xiii)	40 × 32 × 50	64	64
xiv)	50 × 32 × 50	64	64
xv)	50 × 40 × 25	48	64
xvi)	50 × 40 × 40	56	64
xvii)	50 × 40 × 50	64	64
xviii)	50 × 50 × 50	67	76
xix)	50 × 50 × 65	76	76
xx)	80 × 50 × 50	73	89
xxi)	80 × 50 × 80	89	89
xxii)	100 × 80 × 80	95	115

Table 12 Dimensions of Tees (Increasing on the Branch)
(*Clause* 9.1)

All dimensions in millimetres.

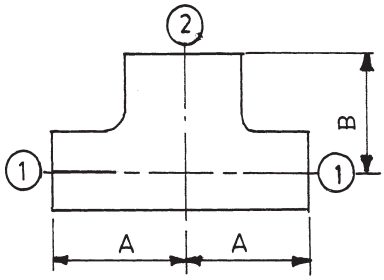

Tee increasing (on the branch)

Sl No. (1)	Nominal Size of Outlet (1) × (2) (2)	Minimum Length, Centre to Face *A* (3)	Minimum Length, Centre to Face *B* (4)
i)	6 × 8	22	21
ii)	8 × 10	24	22
iii)	10 × 15	32	27
iv)	15 × 20	35	32
v)	15 × 25	43	35
vi)	20 × 25	43	38
vii)	25 × 32	51	44
viii)	25 × 40	52	44
ix)	32 × 40	52	49
x)	40 × 50	64	56
xi)	50 × 65	76	67
xii)	50 × 80	89	73
xiii)	65 × 80	89	79
xiv)	80 × 100	115	95

Table 13 Dimensions of Crosses, Reducing
(*Clause* 9.1)

All dimensions in millimetres.

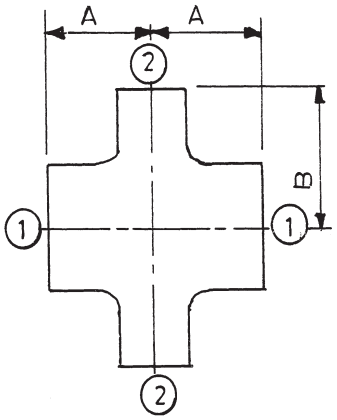

Cross, Reducing

Sl No. (1)	Nominal Size of Outlet (1) × (2) (2)	Minimum Length, Centre to Face *A* (3)	Minimum Length, Centre to Face *B* (4)
i)	8 × 6	21	22
ii)	10 × 8	22	24
iii)	15 × 10	27	32
iv)	20 × 15	32	35
v)	25 × 15	35	43
vi)	25 × 20	38	43
vii)	32 × 15	38	51
viii)	32 × 25	44	51
ix)	40 × 15	38	52
x)	40 × 25	44	52
xi)	50 × 25	48	64
xii)	50 × 40	56	64
xiii)	65 × 50	67	76
xiv)	80 × 40	67	89
xv)	80 × 50	73	89
xvi)	100 × 50	83	115
xvii)	100 × 80	95	115
xviii)	125 × 80	115	140
xix)	125 × 100	130	140
xx)	150 × 80	120	160
xxi)	150 × 100	135	160

Table 14 Elbows, Tees and Crosses, Side Outlet, Equal
(*Clause* 9.1)

All dimensions in millimetres.

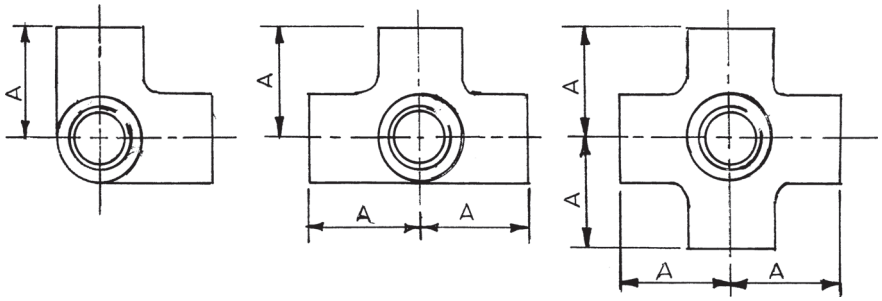

Elbow side outlet equal Tee side outlet equal Cross side outlet equal

Sl No.	Nominal Size of Outlet	Minimum Length, Centre to Face for All Outlets *A*
(1)	(2)	(3)
i)	15	32
ii)	20	35
iii)	25	43
iv)	32	51
v)	40	52
vi)	50	64

Table 15 Dimensions of Elbows, Round, Male and Female, Equal
(*Clause* 9.1)

All dimensions in millimetres.

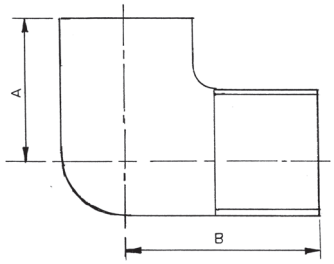

Elbow, Male & Female, Equal

Sl No.	Nominal Size of Outlet	Minimum Length, Centre to Face *A*	Minimum Length, Centre to Face *B*	Minimum Bore of Male End	Maximum Bore of Male End
(1)	(2)	(3)	(4)	(5)	(6)
i)	8	19	27	6.5	8
ii)	10	21	29	8.5	10.5
iii)	15	25	35	11.5	13
iv)	20	30	40	18	21
v)	25	37	46	24	26
vi)	32	43	54	30	32
vii)	40	49	57	37	39
viii)	50	59	70	48	51
ix)	65	68	83	62	66
x)	80	81	94	75	79
xi)	100	100	115	97	104

Table 16 Dimensions of Elbows, Equal, 135°
(*Clause* 9.1)

All dimensions in millimetres.

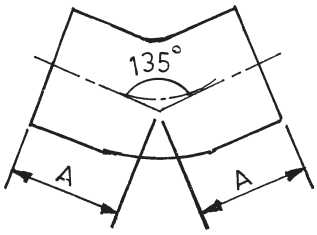

Elbow-135, Equal

Sl No. (1)	Nominal Size of Outlet (2)	Minimum Length, Centre to Face *A* (3)
i)	6	16
ii)	8	17
iii)	10	19
iv)	15	22
v)	20	27
vi)	25	33
vii)	32	38
viii)	40	44
ix)	50	51
x)	65	60
xi)	80	73
xii)	100	105

Table 17 Dimensions of Y-Pieces, Female, Equal
(*Clause* 9.1)

All dimensions in millimetres.

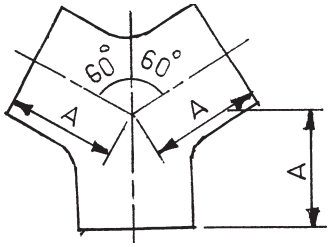

Y-Piece, Equal

Sl No. (1)	Nominal Size of Outlet (2)	Minimum Length, Centre to Face *A* (3)
i)	15	27
ii)	20	35
iii)	25	36
iv)	32	44
v)	40	49
vi)	50	57
vii)	65	71
viii)	80	79
ix)	100	100

Table 18 Dimensions of Socket, Reducing
(*Clause* 9.1)

All dimensions in millimetres.

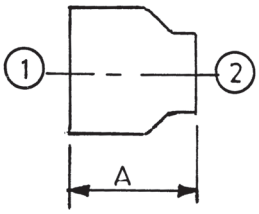

SOCKET REDUCING

Sl No. (1)	Nominal Size of Outlet (1) × (2) (2)	Minimum Length *A* (3)	Sl No. (1)	Nominal Size of Outlet (1) × (2) (2)	Minimum Length *A* (3)
i)	8 x 6	25	xxii)	50 x 15	70
ii)	10 x 6	30	xxiii)	50 x 20	68
iii)	10 x 8	29	xxiv)	50 x 25	67
iv)	15 x 6	41	xxv)	50 x 32	65
v)	15 x 8	40	xxvi)	50 x 40	64
vi)	15 x 10	38	xxvii)	65 x 25	76
vii)	20 x 8	44	xxviii)	65 x 32	75
viii)	20 x 10	43	xxix)	65 x 40	73
ix)	20 x 15	41	xxx)	65 x 50	71
x)	25 x 8	54	xxxi)	80 x 25	86
xi)	25 x 10	52	xxxii)	80 x 32	84
xii)	25 x 15	51	xxxiii)	80 x 40	83
xiii)	25 x 20	49	xxxiv)	80 x 50	81
xiv)	32 x 10	60	xxxv)	80 x 65	79
xv)	32 x 15	59	xxxvi)	100 x 40	105
xvi)	32 x 20	57	xxxvii)	100 x 50	100
xvii)	32 x 25	56	xxxviii)	100 x 65	100
xviii)	40 x 15	65	xxxix)	100 x 80	98
xix)	40 x 20	64	xxxx)	125 x 80	115
xx)	40 x 25	62	xxxxi)	125 x 100	115
xxi)	40 x 32	60	xxxxii)	150 x 80	140
			xxxxiii)	150 x 100	140

Table 19 Dimensions of Caps
(*Clause* 9.1)

All dimensions in millimetres.

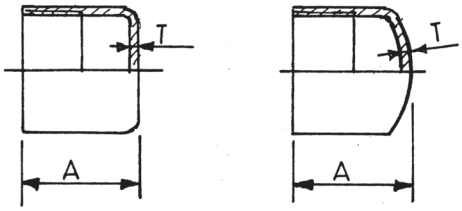

CAP FLAT CAP DOME

Sl No. (1)	Nominal Size (2)	Minimum Length *A* (3)	Minimum Thickness *T* (4)
i)	6	19	3.5
ii)	8	24	3.5
iii)	10	27	3.5
iv)	15	37	4.0
v)	20	38	4.0
vi)	25	44	4.5
vii)	32	51	5.0
viii)	40	54	5.5
ix)	50	60	6.0
x)	65	67	6.0
xi)	80	73	7.0
xii)	100	86	7.0
xiii)	125	98	7.0
xiv)	150	98	7.0

NOTE — Flat or dome pattern caps may be supplied at the option of the manufacturer.

Table 20 Dimensions of Plug

(*Clause* 9.1)

All dimensions in millimetres.

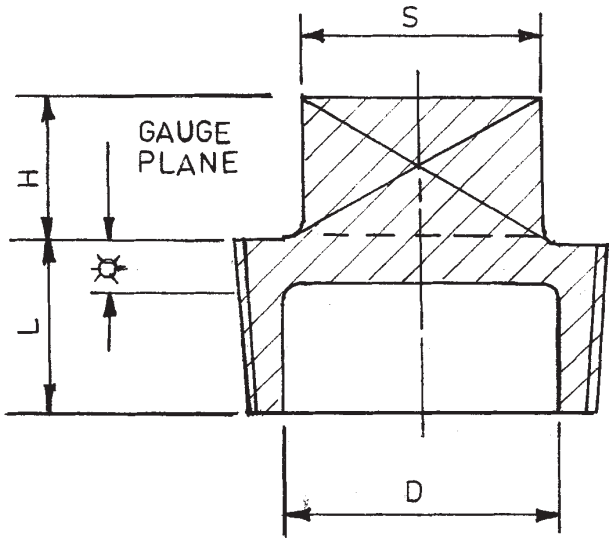

Sl No.	Nominal Size	Minimum Length of Thread for Basic Gauge	Approximate Size of Square *S*	Approximate Height of Square *H*	Maximum Internal Diameter *D*	Minimum Thickness of Metal *K*	Fittings Allowance in Accordance with IS 554
(1)	(2)	(3)	(4)	(5)	(6)	(7)	(8)
i)	6	6.5	6	6	—	—	2 3/4
ii)	8	9.7	9	6	—	—	2 3/4
iii)	10	10.1	11	10	—	—	2 3/4
iv)	15	13.2	13	10	—	—	2 3/4
v)	20	14.5	14	12	—	—	2 3/4
vi)	25	16.8	17	12	22	4	2 3/4
vii)	32	19.1	22	16	31	5	2 3/4
viii)	40	19.1	27	16	33	5	2 3/4
ix)	50	23.4	32	19	48	5	3 1/4
x)	65	26.7	37	19	62	6	4
xi)	80	29.8	37	22	73	8	4
xii)	100	35.8	46	25	97	10	4 1/2
xiii)	125	40.1	51	29	120	12	5
xiv)	150	40.1	60	32	145	12	5

NOTE — Plugs of nominal sizes 25 to 150 mm may be either solid or hollow, and the attention of the purchaser is drawn to the necessary of stating in his enquiry and order which pattern is required.

Table 21 Dimensions of Elbows, Tees and Crosses, Male, Equal
(*Clause* 9.1)

All dimensions in millimetres.

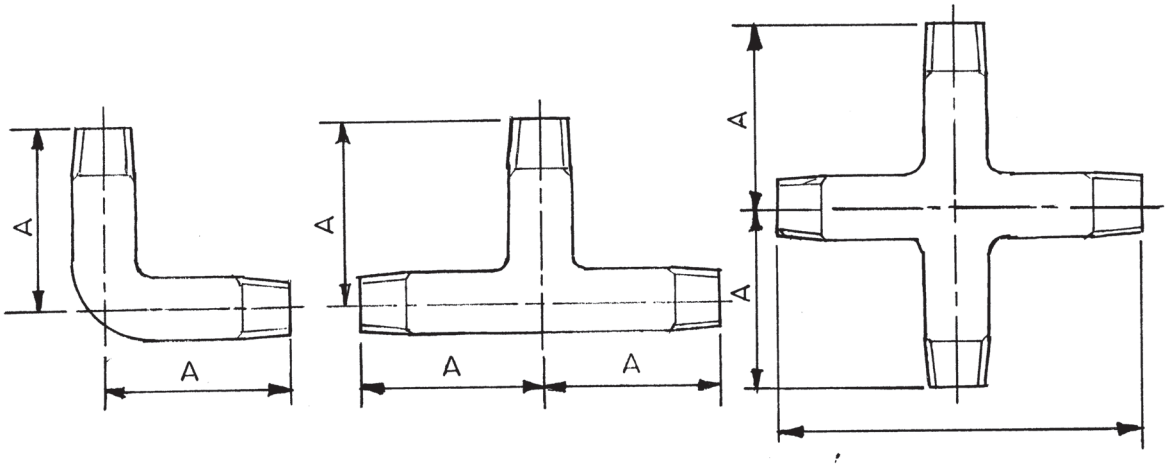

Sl No.	Nominal Size of Outlet	Minimum Length, Centre to Face *A*
(1)	(2)	(3)
i)	15	90
ii)	20	95
iii)	25	100
iv)	32	110
v)	40	115
vi)	50	125
vii)	65	140
viii)	80	150
ix)	100	180
x)	125	200
xi)	150	230

NOTE — Made from heavy tube conforming to IS 1239 (Part 1).

Table 22 Dimensions of Y-Pieces and Angle Tees, Male, Equal
(*Clause* 9.1)

All dimensions in millimetres.

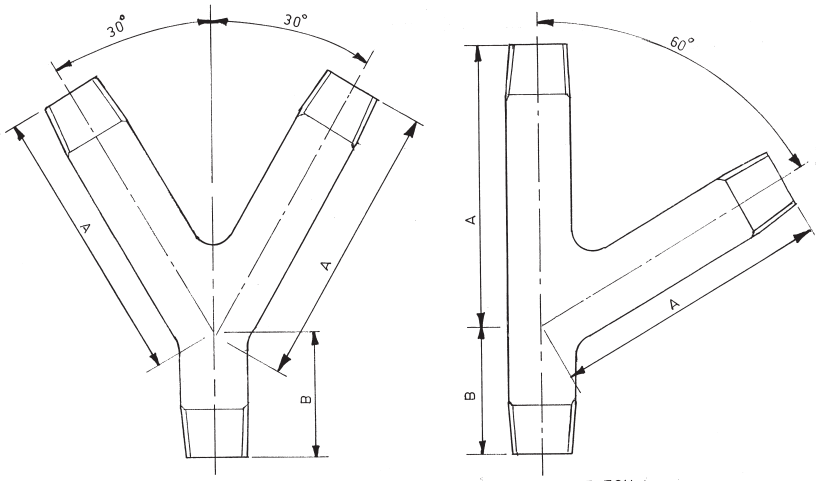

Y Piece, Male, Equal Angle Tee, Male, Equal

Sl No.	Nominal Size of Outlet	Minimum Length, Centre to Face *A*	Minimum Length, Centre to Face *B*
(1)	(2)	(3)	(4)
i)	15	120	57
ii)	20	130	64
iii)	25	150	70
iv)	32	160	73
v)	40	170	76
vi)	50	190	83
vii)	65	200	90
viii)	80	220	100
ix)	100	260	110
x)	125	300	115
xi)	150	340	125

NOTE — Made from heavy tube conforming to IS 1239 (Part 1).

Table 23 Dimensions of Twin Elbows and Sweep Tees, Male, Equal
(*Clause* 9.1)

All dimensions in millimetres.

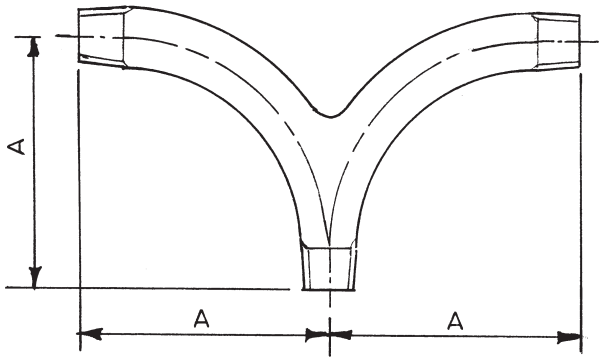

Twin Elbow, Male, Equal

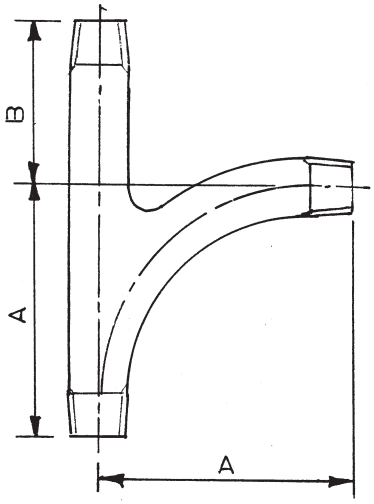

Sweep Tee, Male, Equal

Sl No.	Nominal Size of Outlet	Minimum Length, Centre to Face *A*	Minimum Length, Centre to Face *B*
(1)	(2)	(3)	(4)
i)	15	80	85
ii)	20	90	90
iii)	25	120	100
iv)	32	150	105
v)	40	170	110
vi)	50	200	125
vii)	65	250	135
viii)	80	290	145
ix)	100	380	170
x)	125	530	195
xi)	150	620	220

NOTE — Made from heavy tube conforming to IS 1239 (Part 1).

Table 24 Dimensions of Socket Unions
(*Clause* 9.1)

All dimensions in millimetres.

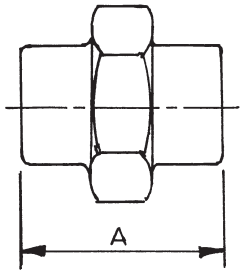

Socket Union

Sl No.	Nominal Size of Outlet	Minimum Length *A*
(1)	(2)	(3)
i)	6	38
ii)	8	44
iii)	10	51
iv)	15	57
v)	20	67
vi)	25	76
vii)	32	85
viii)	40	100
ix)	50	110
x)	65	120
xi)	80	135
xii)	100	160
xiii)	125	185
xiv)	150	210

NOTE — Unions are normally supplied with flat seats and fitted with a washer. Other types of seating are obtainable, if required.

Table 25 Dimensions of Pipe Unions
(*Clause* 9.1)

All dimensions in millimetres.

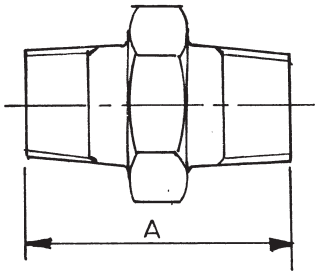

Pipe Union

Sl No.	Nominal Size of Outlet	Minimum Length *A*
(1)	(2)	(3)
i)	6	95
ii)	8	100
iii)	10	110
iv)	15	115
v)	20	120
vi)	25	125
vii)	32	135
viii)	40	140
ix)	50	150
x)	65	165
xi)	80	180
xii)	100	205
xiii)	125	215
xiv)	150	230

NOTES
1 Bodies made from heavy tube conforming to IS 1239 (Part 1).
2 Unions are normally supplied with flat seats and fitted with a washer. Other types of seating are obtainable, if required.

Table 26 Dimensions of Union Bends
(*Clause* 9.1)

All dimensions in millimetres.

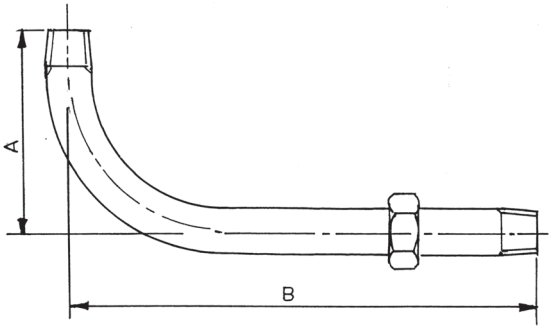

Union Bend

Sl No.	Nominal Size of Outlet	Minimum Length, Centre to Face *A*	Minimum Length, Centre to Face *B*
(1)	(2)	(3)	(4)
i)	6	54	100
ii)	8	64	115
iii)	10	73	125
iv)	15	83	140
v)	20	100	160
vi)	25	120	185
vii)	32	150	220
viii)	40	170	240
ix)	50	205	280
x)	65	245	330
xi)	80	290	380

NOTES
1 Bodies made from heavy tube conforming to IS 1239 (Part 1).
2 Unions are normally supplied with flat seats and fitted with a washer. Other types of seating are obtainable, if required.

Table 27 Dimensions of Hexagon Bushes
(*Clause* 9.1)

All dimensions in millimetres.

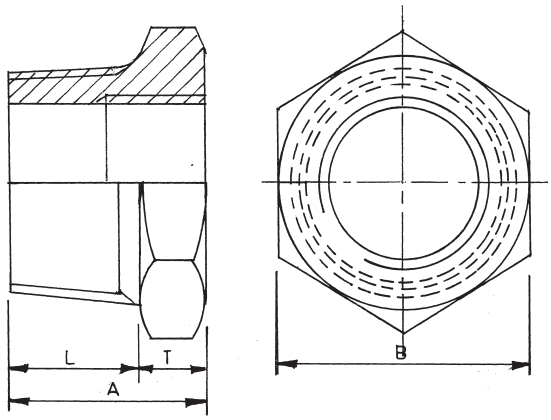

BUSH

Sl No.	Normal Size		Length of Useful Threads for Basic Gauge Lengths Plus Clearance	Thickness of Hexagon	Minimum Overall Lengths	Width Across Flats of Hexagon
	External Threads	Internal Threads	*L, Min*	*T, Max*	*A, Min*	*B*
(1)	(2)	(3)	(4)	(5)	(6)	(7)
i)	8	6	12.5	6	18.5	15.5
ii)	10	8	12.5	7	20.5	17.9
iii)	15	8	17.5	8	25.5	23.0
		10	17.5	7	25.5	23.0
		10	19	10	29	27.8
iv)	20	15	19	10	29	27.8
v)	25	15	21	10	31	35.3
		20	21	10	31	35.3
vi)	32	15	24	11	35	47.2
		20	24	11	35	47.2
		25	24	11	35	47.2
vii)	40	20	24	13	37	52.0
		25	24	13	37	52.0
		32	24	13	37	52.0
viii)	50	25	27	14	41	61.1
		32	27	14	41	61.1
		40	27	14	41	61.1
ix)	65	32	32	16	48	79
		40	32	16	48	79
		50	32	16	48	79
x)	80	40	35	19	54	92
		50	35	19	54	92
		65	35	19	54	92
xi)	100	50	40	22	62	117
		65	40	22	60	117
		80	40	22	62	117
xii)	125	80	45	25	70	143
		100	45	25	70	143
xiii)	150	80	45	25	70	168
		100	45	25	70	168

NOTE — External and internal threads shall be made as per IS 554.

Table 28 Dimensions of Nipples, Hexagon, Equal
(*Clause* 9.1)

All dimensions in millimetres.

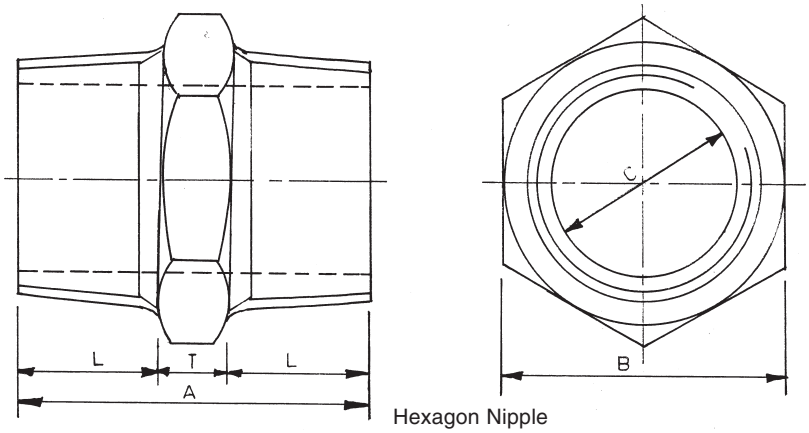

Sl No.	Nominal Size	Minimum Length of Thread for Basic Gauge Length Plus Diameter Clearance *L*	Thickness of Hexagon *T*	Minimum Overall Length *A*	Maximum Diameter of Bore *C*	Width Across Flats of Hexagon *B*
(1)	(2)	(3)	(4)	(5)	(6)	(7)
i)	6	9.5	6	25	5.5	13.1
ii)	8	12.5	6	31	6.5	15.5
iii)	10	12.5	8	33	9.5	17.9
iv)	15	17.5	8	43	12.5	23.0
v)	20	19	10	48	19	27.8
vi)	25	21	20	52	25	35.3
vii)	32	24	11	59	32	47.2
viii)	40	24	13	61	38	52.0
ix)	50	27	14	68	51	61.1
x)	65	32	16	80	64	79
xi)	80	35	19	89	76	92
xii)	100	40	22	102	100	117
xiii)	125	45	25	115	125	143
xiv)	150	45	25	115	150	168

9.2 Tolerances

9.2.1 Where maximum and minimum dimensions are not specified, the tolerance for centre to face and centre to centre dimensions shall be as specified in Table 29.

9.2.2 *Tolerance for the Alignment of Threads*

The axes of the threads shall be coincident with the theoretical axes of the fitting within a tolerance of $\pm 0.5^{o}$ on the run and on the branches.

9.2.3 Thread tolerances shall be in accordance with those specified in IS 554.

10 JOINTS

Tubulars and fittings shall be screwed with taper or parallel threads or both as detailed in tables. Unless otherwise specified, sockets for tubulars shall have parallel threads. All threads shall be in accordance with IS 554. Gauging in accordance with IS 8999 shall be considered as an adequate test for conformity of threads.

11 TESTS ON FITTINGS AND SOCKETS

11.1 The fittings and sockets before they leave the works, shall be subjected to either of the following pressure tests, as mutually agreed to between the purchaser and the manufacturer:

a) Application of an internal hydraulic pressure of not less than 5 MPa, or

b) Application of an internal air pressure of 0.7 MPa whilst the fittings is completely immersed in water or light oil.

11.1.1 The sample size and the acceptance criteria for the pressure test shall be as given in Table 30.

11.1.2 Test duration shall be 10 s minimum for both the process either by **11.1**(a) or **11.1**(b).

11.2 Expansion Test on Sockets

At the option of the manufacturer any one of the tests described in **11.2.1** and **11.2.2** shall be carried out.

11.2.1 *Drift Expanding Test*

It shall be carried out on sockets in accordance with IS 2335, on a conical mandrel having an included taper on diameter 1 in 16 and the minimum increase in outside diameter after expansion shall be as follows:

Nominal Bore mm	*Percentage of Expansion Min*
Up to and including 25	2.0
32-40	1.5
50-80	1.0
100-50	0.5

Table 29 Tolerance
(*Clause* 9.2.1)

All dimensions in millimetres.

Sl No.	Dimensions		Tolerance
	Above	Up to and Including	
(1)	(2)	(3)	(4)
i)	—	30	± 1.5
ii)	30	50	± 2.0
iii)	50	75	± 2.5
iv)	75	100	± 3.0
v)	100	175	± 3.5

NOTES
1 Centre to face dimensions apply to elbows, bends, tees, crosses, etc.
2 Face to face dimensions apply to sockets, nipples, etc.
3 Centre to centre dimensions apply to return bends.

Table 30 Scale of Sampling and Acceptance Criteria for Pressure Test
(*Clause* 11.1.1)

Sl No.	Lot Size	Stage	Sample Size	Cumulative Sample Size	Acceptance Number	Rejection Number
(1)	(2)	(3)	(4)	(5)	(6)	(7)
i)	Up to 1 000	First	13	13	0	2
		Second	13	26	1	2
ii)	1 001-3 000	First	20	20	0	2
		Second	20	40	1	2
iii)	3 001-5 000	First	32	32	0	3
		Second	32	64	3	4
iv)	5 001-10 000	First	50	50	1	4
		Second	50	100	4	5
v)	10 001 and above	First	80	80	2	5
		Second	80	160	6	7

11.2.2 *Taper Screw Plug Test*

Sockets shall be capable of withstanding the expansion test as described below without showing any sign of fracture of failure.

11.2.2.1 The test shall consist of screwing the selected socket on a taper screw plug.

11.2.2.2 The threads of socket shall be thoroughly clean and free from foreign matter. Should the threads show sign of burr, this shall be removed by means of a pipe thread tap. The threads of the socket and the end of the test plug shall be lubricated with oil, and the socket shall then be screwed on to the test plug between the jaws of a vice or other suitable fixtures and by rotating the socket with both hands. The socket shall then be further rotated five complete turns beyond hand tightness, either by means of a pipe wrench of an adequate length to operate the test with gradual turning or by a power machine giving an appropriate leverage. The wrench shall not be hammered (*see* Fig. 1).

11.2.2.3 The plugs shall be manufactured from steel and shall be hardened to give a Vickers hardness between 700 and 800 HV when determined by applying a load of 30 kgf in accordance with IS 1501.

11.2.2.4 The dimensions of plug shall conform with those given in Table 31. The threads shall be ground after the plugs are case hardened, and the thread form and angle of taper shall be in accordance with the appropriate dimensions and tolerances specified in IS 554.

11.2.2.5 For routine testing, use may be made, if so desired, of unhardened steel plugs in accordance with the dimensions given in Table 31 and having machined threads. The thread form and angle of taper being in accordance with the appropriate dimensions and tolerance specified in IS 554 .

11.2.2.6 In case of dispute, however in the test shall be carried out with the hardened plugs specified in **11.2.2.3** and **11.2.2.4**.

12 SAMPLING OF TUBULARS, SOCKETS

12.1 The procedure for sampling of tubulars, sockets and fittings for various tests shall be given in IS 4711.

12.2 Re-test

Should any one of the test pieces first selected fail to pass any of the tests specified, two further samples shall be selected for testing in respect of each failure. Should the test pieces from both these additional samples pass, the material shall be deemed to comply with the requirements of the particular test. Should the test pieces from either of these additional samples fail, the material represented by the test samples shall be deemed as not complying with the standard.

13 GALVANIZING

13.1 Where tubulars, sockets and fitting are required to be galvanized, the zinc coating shall be done in accordance with IS 4736 and the requirements as given in **13.1.1 to 13.1.4**.

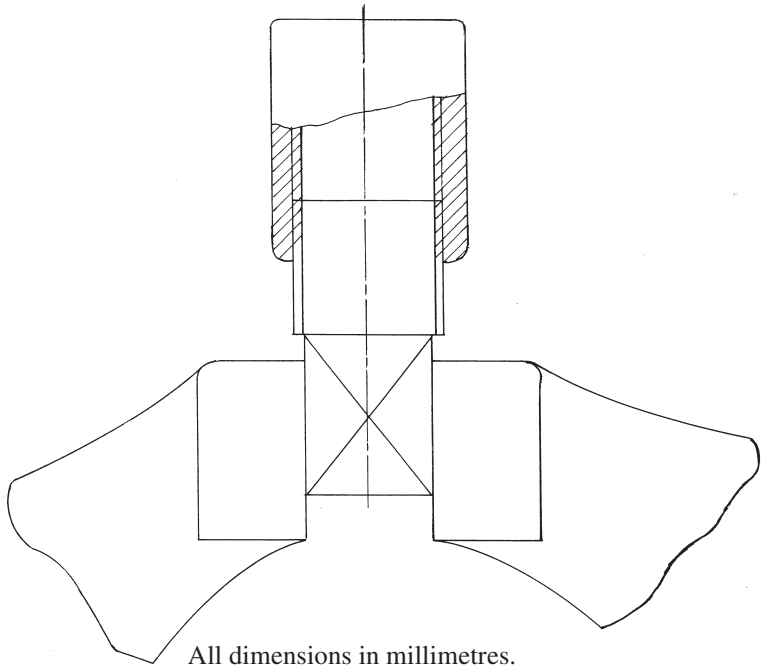

All dimensions in millimetres.

FIG. 1 MECHANICAL EXPANSION TEST ON SOCKETS

Table 31 Dimensions of Taper Screw Plugs for Expansion Test
(*Clauses* 11.2.2.4 *and* 11.2.2.5)

All dimensions in millimetres.

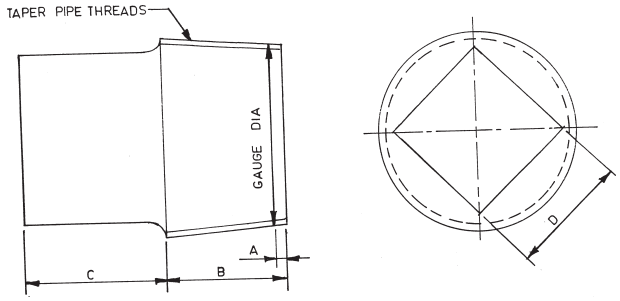

Sl No.	Nominal Bore	Gauge Diameter	Threads per 25.4	Tolerance on Total Number of Threads	*A*	*B*	*C*	*D*
(1)	(2)	(3)	(4)	(5)	(6)	(7)	(8)	(9)
i)	6	9.728	28	2	1.8	13	11	7
ii)	8	13.157	19	2	2.8	19	13	10
iii)	10	16.662	19	2	2.8	19	16	13
iv)	15	20.955	14	2	3.6	25	19	14
v)	20	26.441	14	2	3.6	25	29	17
vi)	25	33.249	11	2	4.6	32	29	21
vii)	32	41.910	11	2	4.6	32	32	27
viii)	40	47.803	11	2	4.6	32	38	32
ix)	50	59.614	11	2	4.6	32	38	37
x)	65	75.184	11	2	4.6	32	51	48
xi)	80	87.884	11	2	4.6	32	57	54
xii)	100	113.030	11	2	4.6	32	64	70
xiii)	125	138.430	11	2	4.6	32	67	76
xiv)	150	163.830	11	2	4.6	32	70	89

13.1.1 *Mass of Zinc Coating*

Mass of zinc coating shall be determined before threading on full length test piece in case the length of the fittings are less than 100 mm and on 100 mm length in case of the fittings are more that 100 mm in accordance with IS 4736 and shall not be less than 360 g/m^2.

13.1.2 *Uniformity of Zinc Coating*

The test for uniformity of zinc coating shall be done on full length fittings in case the length of the fittings are less than 100 mm and on 100 mm length in the length of the fittings are more 100 mm in accordance with IS 2633 and shall withstand 5 one minute dips.

13.1.3 *Adhesion Test*

The adhesion of zinc coating on fittings shall be determined by pivoted hammer test in accordance with IS 2629.

13.1.4 The zinc coating shall be reasonably smooth and free from such imperfections as flux, ash and dross inclusions, bare patches, black spots, pimples, lumpiness, runs, rust stains, bulky white deposits and blisters.

13.1.5 Tubulars, sockets and fittings shall be galvanized before screwing.

14 WORKMANSHIP

Tubulars, sockets and fitting shall be clearly finished and reasonably free from scale, surface flaws, laminations and other defects. The screw threads of tubulars, sockets and fittings shall be clean and well cut. The ends shall be cut clearly and square unless otherwise specified.

15 MARKING

15.1 Tubulars, sockets and fittings shall be suitably packed and threads protected from damage and marked with the following details:

a) Manufacturer's name or trade-mark; and

b) Size designation.

15.2 BIS Certification Marking

The tubulars, sockets and fittings may also be marked with the Standard Mark.

15.2.1 The use of the Standard Mark is governed by the provision of the *Bureau of Indian Standards Act,* 1986 and the Rules and Regulations made thereunder. The details of conditions under which the licence for the use of the Standard Mark may be granted to the manufacturers or producers may be obtained from the Bureau of Indian Standards.

ANNEX A

(*Foreword*)

NOMINAL SIZE OF PIPE THREADS AND CORRESPONDING NOMINAL BORES OF PIPES

Sl No.	*Nominal Size of Pipe Threads (As per IS 554)*	*Corresponding Nominal Bore [As per IS 1239 (Part 1)]*
(1)	(2)	(3)
i)	1/16	—
ii)	1/8	6
iii)	1/4	8
iv)	3/8	10
v)	1/2	15
vi)	3/4	20
vii)	1	25
viii)	1 ¼	32
ix)	1 ½	40
x)	2	50
xi)	2 ½	65
xii)	3	80
xiii)	3 ½	—
xiv)	4	100
xv)	5	125
xvi)	6	150

Bureau of Indian Standards

BIS is a statutory institution established under the *Bureau of Indian Standards Act*, 1986 to promote harmonious development of the activities of standardization, marking and quality certification of goods and attending to connected matters in the country.

Review of Indian Standards

Amendments are issued to standards as the need arises on the basis of comments. Standards are also reviewed periodically; a standard along with amendments is reaffirmed when such review indicates that no changes are needed; if the review indicates that changes are needed, it is taken up for revision. Users of Indian Standards should ascertain that they are in possession of the latest amendments or edition by referring to the latest issue of 'BIS Catalogue' and 'Standards : Monthly Additions'.

This Indian Standard has been developed from Doc No.: MTD 19 (4999).

Amendments Issued Since Publication

Amend No.	Date of Issue	Text Affected

BUREAU OF INDIAN STANDARDS

Headquarters:

Manak Bhavan, 9 Bahadur Shah Zafar Marg, New Delhi 110 002
Telephones : 2323 0131, 2323 3375, 2323 9402 *Website*: www.bis.org.in

Regional Offices:		*Telephones*
Central	: Manak Bhavan, 9 Bahadur Shah Zafar Marg NEW DELHI 110002	2323 7617 2323 3841
Eastern	: 1/14 C.I.T. Scheme VII M, V. I. P. Road, Kankurgachi KOLKATA 700054	2337 8499, 2337 8561 2337 8626, 2337 9120
Northern	: SCO 335-336, Sector 34-A, CHANDIGARH 160022	60 3843 60 9285
Southern	: C.I.T. Campus, IV Cross Road, CHENNAI 600113	2254 1216, 2254 1442 2254 2519, 2254 2315
Western	: Manakalaya, E9 MIDC, Marol, Andheri (East) MUMBAI 400093	2832 9295, 2832 7858 2832 7891, 2832 7892

Branches: AHMEDABAD. BANGALORE. BHOPAL. BHUBANESHWAR. COIMBATORE. DEHRADUN. FARIDABAD. GHAZIABAD. GUWAHATI. HYDERABAD. JAIPUR. KANPUR. LUCKNOW. NAGPUR. PARWANOO. PATNA. PUNE. RAJKOT. THIRUVANANTHAPURAM. VISAKHAPATNAM.

Published by BIS, New Delhi